FIK
Max Flow: 170 gpm (644 lpm)

FIK In-Tank Filters

Working Pressures to:
145 psi / 1000 kPa / 10 bar

Rated Static Burst to:
217 psi / 1500 kPa / 15 bar

Flow Range To:
170 gpm / 644 lpm

Applications
- Cooling Circuits
- Fluid Conditioning Systems
- Lube Oil Systems
- Process Systems
- Return Lines
- Side Loop Systems

STYLE A STYLE B STYLE C STYLE D STYLE E

Features
FIK in-tank filters are economical, space-saving units offering a variety of options including aluminum or plastic access covers, mounting options, and breathers. FIK filters, featuring a die-cast aluminum head and a steel or plastic canister are designed to handle heavy-duty applications. The head (and the inlet) sit above the tank, while the housing remains inside the tank, offering design-in flexibility. Optional air breather featuring T.R.A.P.™ technology are available with style A and B, designed to allow the breather to be mounted directly in the FIK filter head, thus eliminating the cost associated with an additional penetration to the hydraulic tank for breather installation. FIK filters offer three service indicators to choose from: pressure gauge, visual indicator and electrical indicator. FIK filter assemblies are shipped from the factory with cellulose or Synteq™ synthetic filter media, and replacement cartridges are offered in a range of media types and performance ratings.

Beta Rating
- Performance to $\beta_{8(c)}$=1000

Porting Size Options
- ½", ¾", 1" NPT
- SAE-8, SAE-12, SAE-16, SAE-20, SAE-24 O-Ring
- 2" SAE 4-Bolt Flange Code 61

Standard Bypass Ratings
- 22 psi / 150 kPa / 1.5 bar

Operating Temperatures
- -4°F to 194°F / -20°C to 90°C

Filter Collapse Ratings
- 145 psid / 1000 kPa / 10 bar

Redesigned with Features for Application Flexibility, Improved Servicing and Enhanced Filtration Performance

STYLE B SHOWN BELOW

Multifunctional Ports (custom)
Contact your Donaldson sales representative for details

- Can be converted into auxiliary inlet ports
- The two secondary inlet ports can be used in conjunction with the main inlet port for higher flow rates

T.R.A.P.™ Breather Technology
Breather ordered separately
Plug ships standard. Pressurized & atmospheric breathers available.

- Quick fit connection
- Anti-splash design allows smooth operation under tilt conditions
- Keeps reservoir free from condensation

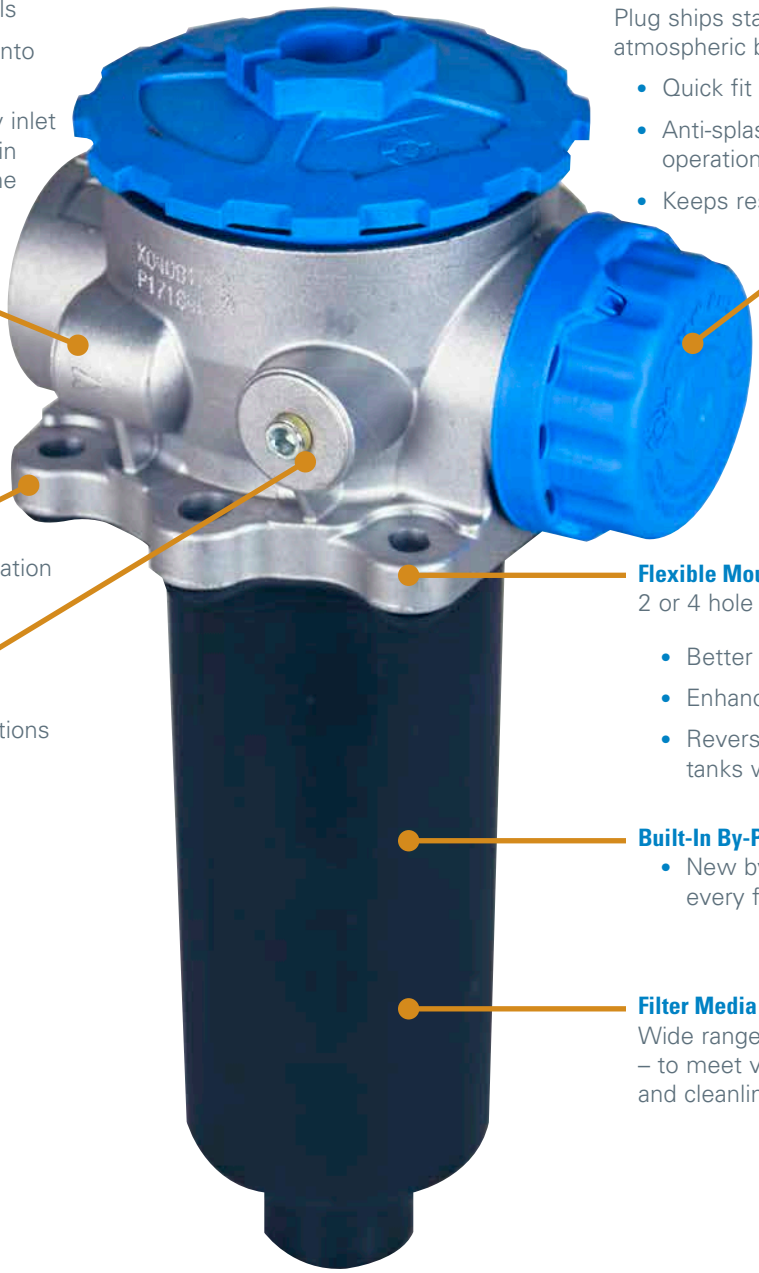

Flat Gasket Design

- For leak-tight operation

Service Indicator Ports

- Electrical, visual or pressure gauge options

Flexible Mounting Configurations
2 or 4 hole mounting option

- Better sealing and stability
- Enhanced stability on plastic tanks
- Reverse compatible – retrofit existing tanks with the new hole configuration

Built-In By-Pass Valve

- New by-pass valve installed with every filter replacement

Filter Media Technology
Wide range of Donaldson media offerings – to meet various performance targets and cleanliness standards

FIK
Max Flow: 170 gpm (644 lpm)

Donaldson. FILTRATION SOLUTIONS

FIK Specification Illustrations

LOW FLOW ASSEMBLIES
< 32 gpm (120 lpm)

STYLE A
K030319

STYLE B
K040811
K040812
K040813
K041782

HIGH FLOW ASSEMBLIES
5 - 170 gpm (18 - 643 lpm)

STYLE C, D, E
Assembly part numbers on following page

Improved Design Feature
- 2 or 4 hole mounting options
- Built-in by-pass valve in the cartridge
- Improved seal design
- Anti-splash air flow path
- Optional mini T.R.A.P. breather

Improved Design Feature
- 2 or 4 hole mounting options
- Built-in by-pass valve in the cartridge
- Improved seal design
- Anti-splash air flow path
- Optional mini T.R.A.P. breather
- Multifunctional ports for accessories

Improved Design Feature
- Improved seal design
- Built-in by-pass valve in the cartridge

ASSEMBLY - SIDE VIEW

STYLE A

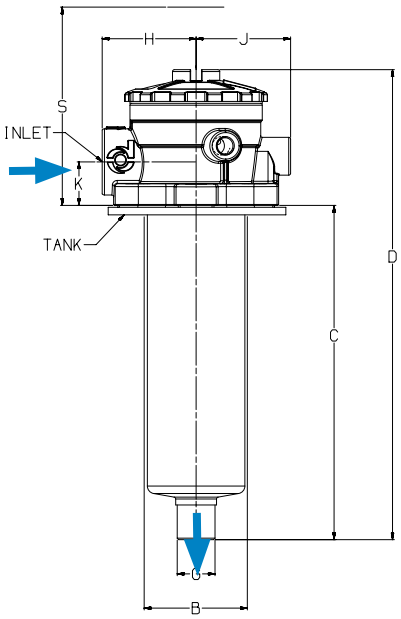

STYLE B

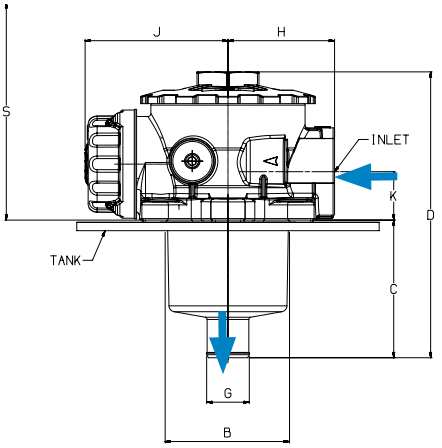

STYLE C, D, E

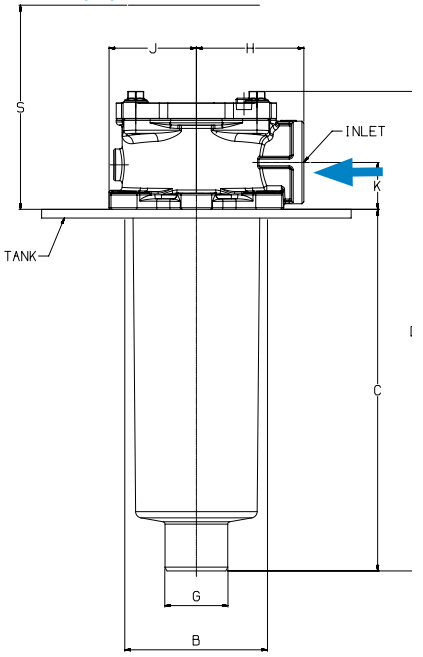

HEAD - TOP VIEW

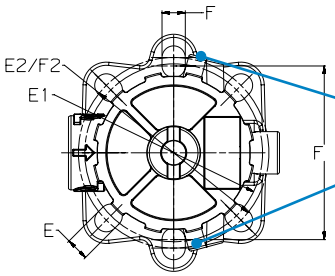

Ports for service indicator

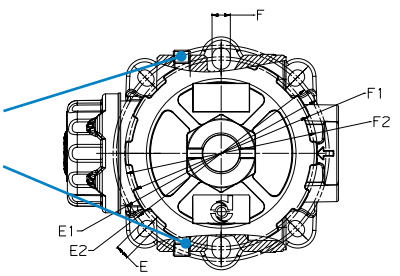

HIGH FLOW ASSEMBLIES

5 - 170 gpm (18 - 643 lpm)

STYLE C

K041770
K041771
K041772
K041773
K031027 *(2 point mount only)*
K041774
K040799
K040798

Improved Design Feature

- 2 or 4 hole mounting options

STYLE D

K070248
K071001
K070249
K071002
K070250
K071003

Design Feature

- 4 hole mounting

STYLE E

K051204
K052053

Design Feature

- 3 hole mounting

HEAD - TOP VIEW

STYLE C

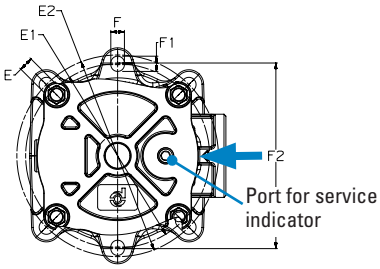

STYLE D

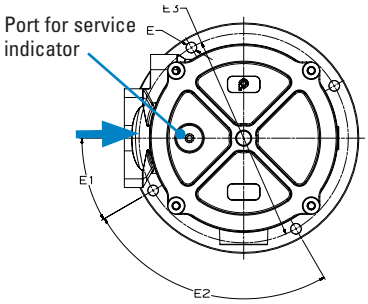

STYLE E

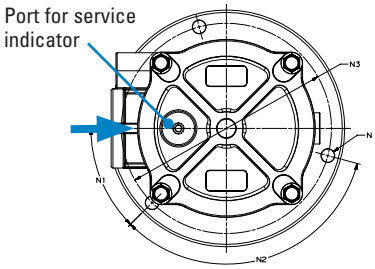

Dimensions

ASSEMBLY DIMENSIONS	ASSEMBLY PART NUMBER																							
	STYLE A		STYLE B						STYLE C								STYLE D						STYLE E	
	K030319		K040811		K040812		K040813 K041782		K031027 *2 pt mount only*		K041770		K041771 K041772 K041773 K041774 K040799		K040798		K070248 K071001		K070249 K071002		K070250 K071003		K051204 K052053	
	mm	in	mm	in	mm	in	mm	in	mm	in	mm	in	mm	in	mm	in	mm	in	mm	in	mm	in	mm	in
C	176.8	6.96	91.0	3.58	141.0	5.55	218.0	8.58	78.0	3.07	99.0	3.90	149.0	5.87	227.7	8.96	242.0	9.53	290.0	11.42	434.0	17.09	224.0	8.82
D	248.6	9.79	189.0	7.44	239.0	9.41	316.0	12.44	132.0	5.20	173.3	6.82	223.2	8.79	301.9	11.89	348.0	13.70	395.5	15.57	539.5	21.24	313.8	12.35
S SERVICE CLEARANCE	220.0	8.66	180.0	7.09	220.0	8.66	305.0	12.01	149.0	5.87	170.0	6.69	220.0	8.66	299.0	11.77	320.0	12.60	365.0	14.37	515.0	20.28	305.0	12.01
G	20.0	0.79	27.6	1.09	27.6	1.09	39.6	1.56	25.2	0.99	27.6	1.09	27.6	1.09	39.5	1.56	50.0	1.97	63.5	2.50	63.5	2.50	40.0	1.57
B TANK OPENING	57.0	2.24	90.0	3.54	90.0	3.54	90.0	3.54	68.6	2.70	90.0	3.54	90.0	3.54	90.0	3.54	175.0	6.89	175.0	6.89	175.0	6.89	131.0	5.16
H	49.7	1.96	70.5	2.78	70.5	2.78	70.5	2.78	49.0	1.93	68.0	2.68	68.0	2.68	68.0	2.68	120.0	4.72	126.0	4.96	126.0	4.96	95.0	3.74
J	54.2	2.13	94.5	3.72	94.5	3.72	94.5	3.72	44.0	1.73	55.0	2.17	55.0	2.17	55.0	2.17	100.0	3.94	100.0	3.94	100.0	3.94	78.0	3.07
K	23.0	0.91	32.0	1.26	32.0	1.26	32.0	1.26	22.0	0.87	29.5	1.16	29.5	1.16	29.5	1.16	41.0	1.61	48.5	1.91	48.5	1.91	35.0	1.38
F 2 POINT MOUNT	11.0	0.43	11.0	0.43	11.0	0.43	11.0	0.43	Ø6.4	Ø0.25	8.5	0.33	8.5	0.33	8.5	0.33	N/A	N/A	N/A	N/A	N/A	N/A	N/A	N/A
F1	Ø82	Ø3.23	Ø112	Ø4.41	Ø112	Ø4.41	Ø112	Ø4.41	90.0	3.54	9.5	0.37	9.5	0.37	9.5	0.37	N/A	N/A	N/A	N/A	N/A	N/A	N/A	N/A
F2	Ø90	Ø3.54	Ø116	Ø4.57	Ø116	Ø4.57	Ø116	Ø4.57	N/A	N/A	115.0	4.53	115.0	4.53	115.0	4.53	N/A	N/A	N/A	N/A	N/A	N/A	N/A	N/A
N 3 POINT MOUNT	N/A	N/A	N/A	N/A	N/A	N/A	N/A	N/A	N/A	N/A	N/A	N/A	N/A	N/A	N/A	N/A	N/A	N/A	N/A	N/A	N/A	N/A	Ø11	Ø0.43
N1	N/A	N/A	N/A	N/A	N/A	N/A	N/A	N/A	N/A	N/A	N/A	N/A	N/A	N/A	N/A	N/A	N/A	N/A	N/A	N/A	N/A	N/A	45°	45°
N2	N/A	N/A	N/A	N/A	N/A	N/A	N/A	N/A	N/A	N/A	N/A	N/A	N/A	N/A	N/A	N/A	N/A	N/A	N/A	N/A	N/A	N/A	120°	120°
N3	N/A	N/A	N/A	N/A	N/A	N/A	N/A	N/A	N/A	N/A	N/A	N/A	N/A	N/A	N/A	N/A	N/A	N/A	N/A	N/A	N/A	N/A	Ø175	Ø6.89
E 4 POINT MOUNT	11.0	0.43	8.5	0.33	8.5	0.33	8.5	0.33	N/A	N/A	9.0	0.35	9.0	0.35	9.0	0.35	Ø10.5	Ø0.41	Ø11	Ø0.43	Ø11	Ø0.43	N/A	N/A
E1	Ø84	Ø3.31	Ø126	Ø4.96	Ø126	Ø4.96	Ø126	Ø4.96	N/A	N/A	Ø115	Ø4.53	Ø115	Ø4.53	Ø115	Ø4.53	30°	30°	30°	30°	30°	30°	N/A	N/A
E2	Ø90	Ø3.54	Ø130	Ø5.12	Ø130	Ø5.12	Ø130	Ø5.12	N/A	N/A	Ø126	Ø4.96	Ø126	Ø4.96	Ø126	Ø4.96	90°	30°	90°	90°	90°	90°	N/A	N/A
E3	N/A	N/A	N/A	N/A	N/A	N/A	N/A	N/A	N/A	N/A	N/A	N/A	N/A	N/A	N/A	N/A	Ø220	Ø8.66	Ø220	Ø8.66	Ø220	Ø8.66	N/A	N/A
WEIGHT	lbs	kg	lbs	kg	lbs	kg	lbs	kg	lbs	kg	lbs	kg	lbs	kg	lbs	kg	lbs	kg	lbs	kg	lbs	kg	lbs	kg
K	1.8	0.8	2.1	0.95	3.2	1.45	4.1	1.86	1.1	0.5	1.8	0.8	2.1	0.95	2.43	1.1	10.0	4.5	13.1	5.9	18.6	8.4	7.0	3.2

FIK
Max Flow: 170 gpm (644 lpm)

Donaldson. FILTRATION SOLUTIONS

FIK Components

Assembly Choices

Port Size	Bypass Rating*	Assembly Part No.	$\beta_{x(c)}$ = 1000	Filter Media†	Provided with Filter	Filter Diameter (in/mm)	Filter Length (in/mm)	Flow Range (@~5 psid / 34.5 kPa)
†additional filter choices on following pages to meet various performance requirements								
Low Flow Assemblies								
STYLE A								
SAE-8 O-Ring	22 psi/1.5 bar	K030319	36 µm	Cellulose	P171839	1.69 / 43	6.38 / 162	10 gpm / 38 lpm
STYLE B								
SAE-12 O-Ring	22 psi/1.5 bar	K040811	36 µm	Cellulose	P171527	2.76 / 70	3.23 / 82	14 gpm / 53 lpm
SAE-16 O-Ring	22 psi/1.5 bar	K040812	36 µm	Cellulose	P171533	2.76 / 70	5.04 / 128	23 gpm / 86 lpm
SAE-20 O-Ring	22 psi/1.5 bar	K040813	36 µm	Cellulose	P171840	2.76 / 70	8.27 / 210	32 gpm / 120 lpm
SAE-20 O-Ring	22 psi/1.5 bar	K041782	11 µm	Synthetic	P171846	2.76 / 70	8.27 / 210	28 gpm / 106 lpm
High Flow Assemblies								
STYLE C								
1/2" NPT	22 psi/1.5 bar	K031027	36 µm	Cellulose	P171503	2.05 / 52	2.64 / 67	5 gpm / 18 lpm
1" NPT	22 psi/1.5 bar	K041770	36 µm	Cellulose	P171527	2.76 / 70	3.23 / 82	15 gpm / 56 lpm
3/4" NPT	22 psi/1.5 bar	K041771	36 µm	Cellulose	P171533	2.76 / 70	5.04 / 128	18 gpm / 68 lpm
1" NPT	22 psi/1.5 bar	K041772	36 µm	Cellulose	P171533	2.76 / 70	5.04 / 128	21 gpm / 79 lpm
SAE-12 O-Ring	22 psi/1.5 bar	K041773	36 µm	Cellulose	P171533	2.76 / 70	5.04 / 128	18 gpm / 68 lpm
SAE-12 O-Ring	22 psi/1.5 bar	K041774	11 µm	Synteq	P171531	2.76 / 70	5.04 / 128	13 gpm / 49 lpm
SAE-16 O-Ring	22 psi/1.5 bar	K040799	36 µm	Cellulose	P171533	2.76 / 70	5.04 / 128	21 gpm / 79 lpm
SAE-16 O-Ring	22 psi/1.5 bar	K040798	36 µm	Cellulose	P171840	2.76 / 70	8.22 / 209	32 gpm / 120 lpm
STYLE D								
SAE-24 O-Ring	22 psi/1.5 bar	K070248	36 µm	Cellulose	P171557	5.51 / 140	7.49 / 203	66 gpm / 248 lpm
SAE-24 O-Ring	22 psi/1.5 bar	K071001	11 µm	Synteq	P171555	5.51 / 140	7.49 / 203	44 gpm / 165 lpm
2" SAE 4-Bolt	22 psi/1.5 bar	K070249	36 µm	Cellulose	P171575	5.51 / 140	9.84 / 250	106 gpm / 399 lpm
2" SAE 4-Bolt	22 psi/1.5 bar	K071002	11 µm	Synteq	P171573	5.51 / 140	9.84 / 250	74 gpm / 278 lpm
2" SAE 4-Bolt	22 psi/1.5 bar	K070250	36 µm	Cellulose	P171581	5.51 / 140	15.75 / 400	170 gpm / 644 lpm
2" SAE 4-Bolt	22 psi/1.5 bar	K071003	11 µm	Synteq	P171579	5.51 / 140	15.75 / 400	120 gpm / 451 lpm
STYLE E								
SAE-20 O-Ring	22 psi/1.5 bar	K051204	36 µm	Cellulose	P171539	3.74 / 95	7.49 / 203	47 gpm / 177 lpm
SAE-20 O-Ring	22 psi/1.5 bar	K052053	11 µm	Synteq	P171537	3.74 / 95	7.49 / 203	32 gpm / 120 lpm

Note
*Bypass valve is an integral part of the replacement filter.
Service indicator port available for all assemblies.
Filter Notes
FIK filters utilize either glass fiber, cellulose, or wire mesh media.
All FIK filters are potted with polyurethane adhesives.
Synteq media designs are double wire-backed using epoxy-coated steel mesh for maximum pleat support and dirt capacity.
Nitrile seals are standard on all FIK filters.

T.R.A.P.™ THERMALLY REACTIVE ADVANCED PROTECTION

T.R.A.P.™ Breather Choices

For Redesigned Style A and B Assemblies with 4 Hole Mounting Configurations Only
Note: T.R.A.P. breathers are not compatible on older style assemblies with 2 hole mounting configuration

Part No.	Description	Efficiency	Fits Assembly Models:
STYLE A			
P567392	Mini T.R.A.P.	3 µm @ 97%	K030319
STYLE B			
	Black		
P766528	Standard plug (no air exchange)	N/A	K040811, K040812, K040813, K041782
	Blue		
P766530	Atmospheric pressure	10 µm @ 98%	K040811, K040812, K040813, K041782
	Red		
P766538	7.3 psi (½ bar) pressurized	10 µm @ 98%	K040811, K040812, K040813, K041782

STYLE A

STYLE B

Standard Breather Choices

Replacement Breathers for Older Style A and B Assemblies with 2 Hole Mounting Configuration Only

Part No.	Efficiency	Fits Assembly Models:
STYLE A		
P173330	10 µm	K030319
STYLE B		
P172434	10 µm	K040811, K040812, K040813

Service Indicators

Pressure Gauges
P171956
G 1/8"
(center back)

P171953
G 1/8"
(bottom mount)

-14.5 to 72 psi
-1 to +5 bar

DC Electrical Indicator
P171966
17 psi / 1.2 bar
(48V AC/DC)

G 1/8"

Visual Indicator
P171958
17 psi / 1.2 bar

G 1/8"

FIK
Max Flow: 170 gpm (644 lpm)

FIK Components

Filter Choices - Low Flow Assemblies

Media Type	$\beta_{x(c)} = 2$	$\beta_{x(c)} = 1000$	Length		Part No.
	Rating based on ISO 16889		in	mm	
STYLE A					
K030319					
Synteq Synthetic		6 µm	6.38	162	P569273
		11 µm	6.38	162	P171845
		23 µm	6.38	162	P171842
Cellulose	7 µm		6.38	162	P171839
	27 µm		6.38	162	P171836
Wire Mesh	60 µm		6.38	162	P171833
	90 µm		6.38	162	P171830

Filter Choices - Low Flow Assemblies

Media Type	$\beta_{x(c)} = 2$	$\beta_{x(c)} = 1000$	Length		Part No.
	Rating based on ISO 16889		in	mm	
STYLE B					
K040811					
Synteq Synthetic		11 µm	3.23	82	P171525
		23 µm	3.23	82	P171526
Cellulose	7 µm		3.23	82	P171527
	27 µm		3.23	82	P171528
Wire Mesh	60 µm		3.23	82	P171529
	90 µm		3.23	82	P171524
K040812					
Synteq Synthetic		6 µm	5.04	128	P569275
		11 µm	5.04	128	P171531
		23 µm	5.04	128	P171532
Cellulose	7 µm		5.04	128	P171533
	27 µm		5.04	128	P171534
Wire Mesh	60 µm		5.04	128	P171535
	90 µm		5.04	128	P171530
K040813					
Synteq Synthetic		6 µm	8.27	210	P569276
		11 µm	8.27	210	P171846
		23 µm	8.27	210	P171843
Cellulose	7 µm		8.27	210	P171840
	27 µm		8.27	210	P171837
Wire Mesh	60 µm		8.27	210	P171834
K041782					
Synteq Synthetic		6 µm	8.27	210	P569276
		11 µm	8.27	210	P171846
		23 µm	8.27	210	P171843
Cellulose	7 µm		8.27	210	P171840
	27 µm		8.27	210	P171837
Wire Mesh	60 µm		8.27	210	P171834

Filter Choices - High Flow Assemblies

Media Type	$\beta_{x(c)} = 2$	$\beta_{x(c)} = 1000$	Length		Part No.
	Rating based on ISO 16889		in	mm	
STYLE C					
K031027					
Synteq Synthetic		6 µm	2.64	67	P569277
		11 µm	2.64	67	P171501
		23 µm	2.64	67	P171502
Cellulose	7 µm		2.64	67	P171503
	27 µm		2.64	67	P171504
Wire Mesh	60 µm		2.64	67	P171505
	90 µm		2.64	67	P171500
K041770					
Synteq Synthetic		11 µm	3.23	82	P171525
		23 µm	3.23	82	P171526
Cellulose	7 µm		3.23	82	P171527
	27 µm		3.23	82	P171528
Wire Mesh	60 µm		3.23	82	P171529
	90 µm		3.23	82	P171524
K041771, K041772, K041773, K041774, K040799					
Synteq Synthetic		6 µm	5.04	128	P569275
		11 µm	5.04	128	P171531
		23 µm	5.04	128	P171532
Cellulose	7 µm		5.04	128	P171533
	27 µm		5.04	128	P171534
Wire Mesh	60 µm		5.04	128	P171535
	90 µm		5.04	128	P171530
K040798					
Synteq Synthetic		6 µm	8.22	209	P569276
		11 µm	8.22	209	P171846
		23 µm	8.22	209	P171843
Cellulose	7 µm		8.22	209	P171840
	27 µm		8.22	209	P171837
Wire Mesh	60 µm		8.22	209	P171834

Filter Choices - High Flow Assemblies

Media Type	$\beta_{x(c)} = 2$	$\beta_{x(c)} = 1000$	Length		Part No.
	Rating based on ISO 16889		in	mm	
STYLE D					
K070248, K071001					
Synteq Synthetic		6 µm	7.49	203	P569279
		11 µm	7.49	203	P171555
		23 µm	7.49	203	P171556
Cellulose	7 µm		7.49	203	P171557
	27 µm		7.49	203	P171558
Wire Mesh	60 µm		7.49	203	P171559
K070249, K071002					
Synteq Synthetic		6 µm	9.84	250	P569280
		11 µm	9.84	250	P171573
		23 µm	9.84	250	P171574
Cellulose	7 µm		9.84	250	P171575
	27 µm		9.84	250	P171576
Wire Mesh	90 µm		9.84	250	P171572
K070250, K071003					
Synteq Synthetic		6 µm	15.75	400	P176749
		11 µm	15.75	400	P171579
		23 µm	15.75	400	P171580
Cellulose	7 µm		15.75	400	P171581
	27 µm		15.75	400	P171582
Wire Mesh	60 µm		15.75	400	P171583
	90 µm		15.75	400	P171578
STYLE E					
K051204, K052053					
Synteq Synthetic		6 µm	7.49	203	P569278
		11 µm	7.49	203	P171537
		23 µm	7.49	203	P171538
Cellulose	7 µm		7.49	203	P171539
	27 µm		7.49	203	P171540
Wire Mesh	60 µm		7.49	203	P171541
	90 µm		7.49	203	P171536

FIK
Max Flow: 170 gpm (644 lpm)

Donaldson. FILTRATION SOLUTIONS

Performance Data

STYLE A

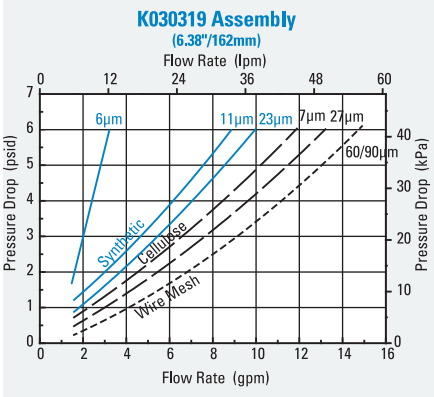

NOTE:
Please note that the line styles used represent different media types

- Synteq Synthetic
- Cellulose
- Wire Mesh

STYLE B

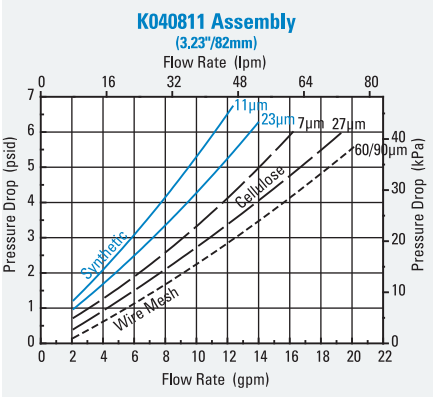

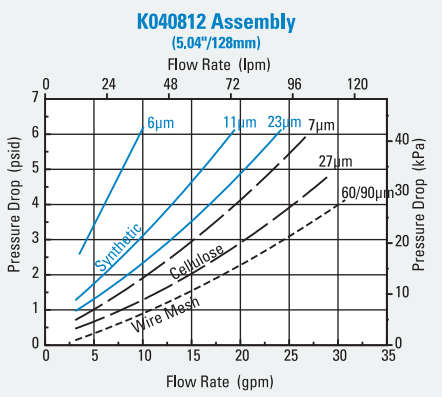

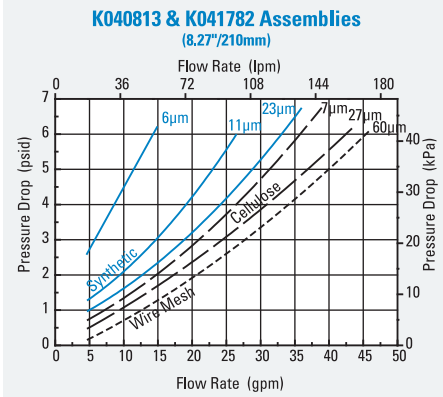

STYLE C

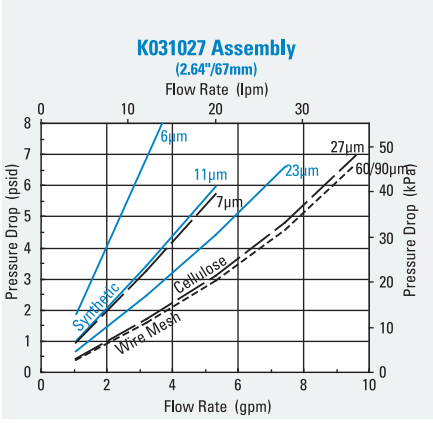

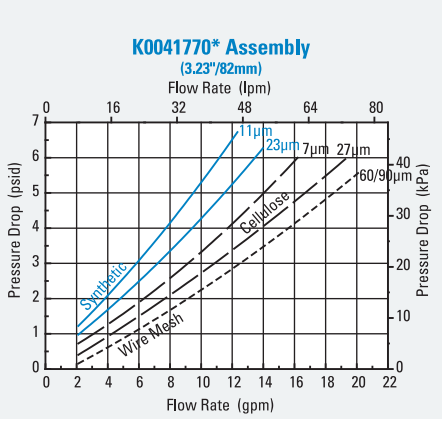

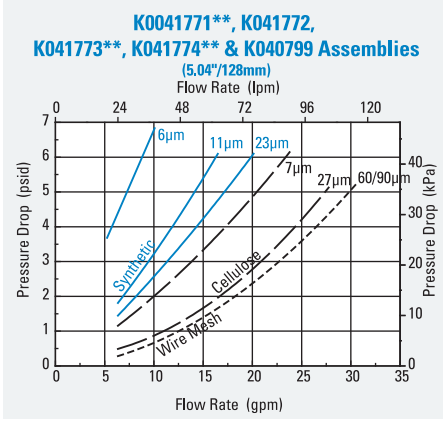

*Subtract ½ psi
**Add ½ psi

Performance Data

STYLE C, continued

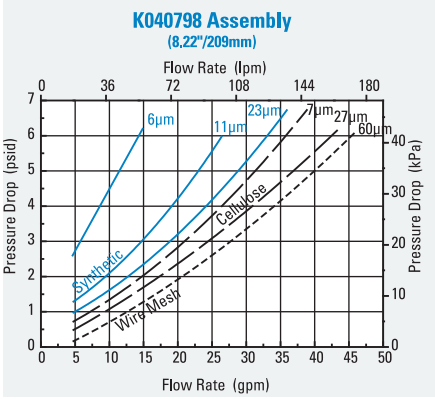

STYLE D

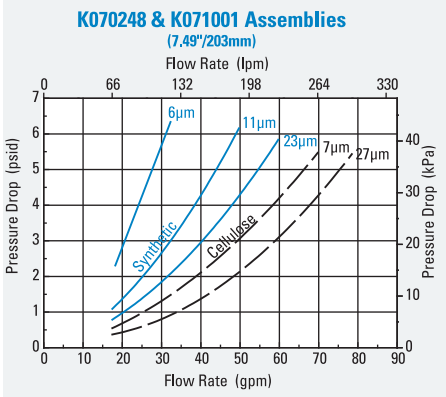

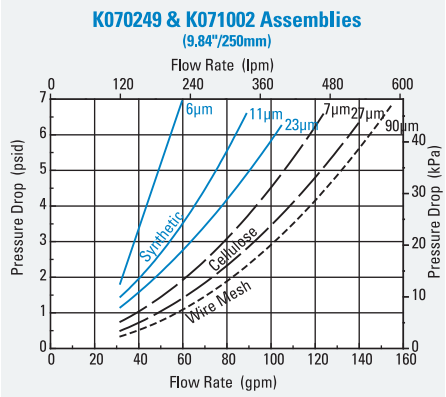

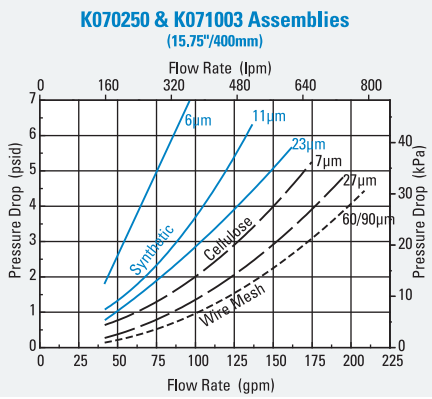
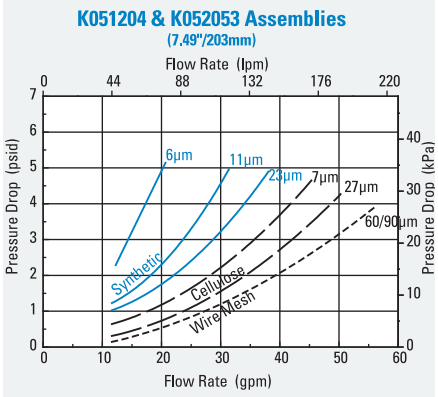
STYLE E